BOON EDAM

YOUR **ENTRY** EXPERTS.

Signature

MEDIUM LEVEL SECURITY

SPEEDLANE **EDGE.**

EXPERIENCE THE **EDGE OF SECURITY** WITH CRISP MINIMALIST LINES

SIGNATURE SPEEDLANE SERIES.

A series of premium speed gates designed to introduce security into areas where space is limited, but a high level of throughput is paramount.

Our new Signature Series of security lanes draws inspiration from modern architectural trends. This series offers reliable functionality and market-leading technology while providing the flexibility to create a one-of-a-kind entrance solution. Choose from three models, the Edge, the Sculpt and the Contour - available as standards or fully customised with Boon Edam's **YourWay** principle.

DESIGN-DRIVEN SECURITY
BOON EDAM
YOURWAY

TAILORED TO PERFECTION

Architects, designers and specifiers can fully customise our speed gates - from shape, size and finish, to access control integration, connectivity, accessories and more. Handpick from a variety of design options, including:

- Cabinet length
- Cabinet height
- Cabinet colour
- Top of cabinet material
- Square, round, or tapered cabinet ends
- User indication design
- Glass height up to 1800mm

OVERVIEW - THE EDGE

Part of the latest Signature Series of Speedlanes, The Edge is the ultimate solution for stylish and secure pedestrian access control. This sleek and modern speed gate offers cutting-edge technology combined with elegant design - making it the perfect solution for high-end commercial buildings and other vulnerable environments.

Designed and manufactured with premium quality materials and market-leading technology, the Signature Speedlane Edge is a reliable and long-lasting solution for controlling high traffic flow safely and securely.

Its intuitive user interface, customisable LED lighting, and multiple access modes make it a versatile choice for any building security strategy. With a compact and space-saving design, the Edge can easily integrate with any architectural concept.

SLICK AND SUSTAINABLE

In addition to its security features, the Edge offers unparalleled ease of use, with intuitive controls and a user-friendly interface. Its fast processing speed and smooth operation ensure a seamless and efficient user experience, even during periods of high traffic.

Designed with sustainability in mind, the Edge is energy-efficient, with low power consumption and eco-friendly materials. Its modular design also makes it easy to maintain and repair, reducing the need for costly and time-consuming replacements.

DESIGN-DRIVEN SECURITY.

For those who desire a crisp, minimalist design, the Edge model is the perfect choice. The smooth, sleek finish and clean square edges enhance this classic cabinet shape, adding a contemporary feel to any interior. Experience the edge of security with this sophisticated model.

DESIGN FEATURES

- Square ended cabinet
- Modern and contemporary design
- Intuitive LED user guidance
- Available in a variety of materials and colours
- Compact design helps optimise valuable floor space
- Easy integration with third-party access control systems
- Easy installation

EFFORTLESS **INTEGRATION.**

The Signature Speedlane Edge offers seamless integration with third-party access control systems, allowing maximum flexibility in your security setup. The Signature Speedlane Series of speed gates are designed to work seamlessly with leading access control providers to meet your unique security requirements.

OPTIONS

- QR Code or Barcode Scanner
- Card Reader
- Elevator Destination Control
- BoonTouch Control Panel
- MorphoWave Reader
- Facial Recognition
- Floor Plinths
- Barrier Detailing

For more information about the options available, please **contact your local entry expert**.

PRODUCT FEATURES

- Tailgating and safety detection sensors as standard
- Intuitive user guidance
- Flexible lane configurations
- Multiple integration capabilities
- Easy installation
- Small footprint
- Smooth, swinging glass barriers
- Made with premium quality materials
- Fully customisable

KEY BENEFITS

- Relieves pressure from security or reception staff
- Coordinates beautifully with existing building décor and design
- Short cabinet length optimises the use of valuable floor space
- Built to last

SUGGESTED SEGMENTS

- Commercial offices and corporate headquarters
- Universities and higher education
- Finance, banking and government buildings
- Hospitality and leisure
- Healthcare facilities
- Retail

TECHNICAL SPECIFICATION.

STANDARD SPECIFICATION

DIMENSIONS	
Cabinet Height (mm)	1064
Cabinet Length (mm)	1400+
Cabinet Width (mm)	160+
Glass Wing Height Standard (mm)	940
Glass Wing Height High (mm)	Up to 1800
Passage Width Double Wing (mm)	615
Passage Width Double Wing Wide (mm)	915
Overall Lane Width Standard (mm)	1085
Overall Lane Width Wide (mm)	1385
Throughput	20 - 30 Users per minute
AESTHETICS	
Cabinet Material	Stainless Steel
Cabinet Colour	Stainless Steel
Lane Wings	10mm thick, clear toughened glass
TECHNOLOGY	
Energy Consumption Whilst Operating (W)	60
Power Supply Stationary (W)	50
Sleep Mode (W)	40
Operating Temperature	-15°C to +50°C
Intuition	Low-energy (Sleep mode) Feedback signals LED guidance
Power Supply	110-240 VAC, 50/60 Hz
Number of Inputs	8
Number of Outputs	6
Reliability (MCBF)	5 million lifecycles (10 million lifecycles with servicing)
SAFETY	
Safety Sensors	Yes
Fire Alarm Connection	Yes
Fail Safe Operation	Yes
SECURITY	
Tailgating Detection	Yes
Security Sensors	Yes
Confirmation of Passage Signal	Yes
Alarm Indication	Local audio output (buzzer) and visual feedback

signature

TECHNICAL SPECIFICATION.

ADD-ONS AND ACCESSORIES

CUSTOMISATION OPTIONS	
Cabinet Shape	Square
Materials and Finishes	Stainless Steel / Aluminium / Anodised / Brass / Bronze / PPC RAL / Anodic PPC / Vinyl
Base Plates	Yes
Floor Plinths	Yes
Barrier Posts	Yes
BoonTouch Control Panel	Yes
TCP/IP Connection	Yes

INTEGRATION OPTIONS	
Card Reader	Yes
QR Reader	Yes
Lift Destination Control	Yes
Facial Recognition	Yes
MorphoWave Reader	Yes
Biometric Authentication	Yes
Thermal Imaging	Yes

DIMENSIONS

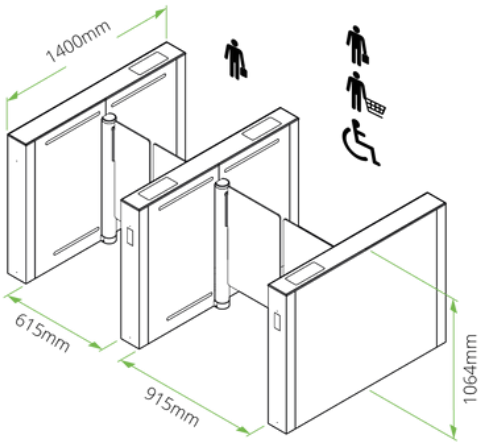

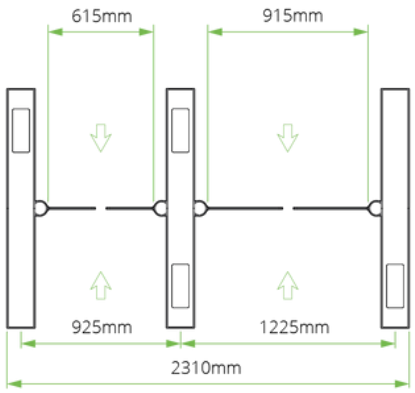

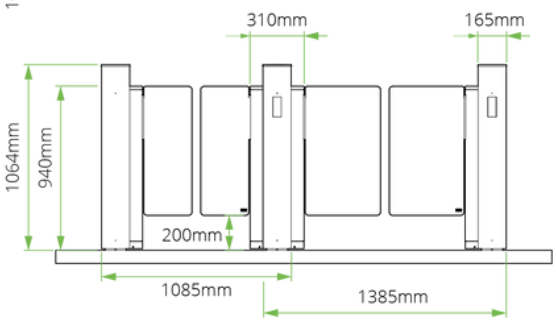

signature

STAY BREAKDOWN PREPARED

Whether it is a revolving door, speed gate or security door, all of our products require preventative care to ensure they continue to look and perform as intended. With routine services and preventative maintenance, you minimise the risk of unexpected breakdowns and costly repairs while increasing the longevity and efficiency of your entrance.

Our service sales specialists and engineers work together to ensure that your products are fully maintained throughout their life-cycle. With national coverage and dedicated regional experts, you can expect a more efficient yet, premium service - no matter where you are in the world.

We offer a variety of system maintenance contracts, ranging from basic to ultimate care, so you can choose the level of agreement that is right for you.

With a proven Mean Cycle Before Failure (MCBF) of 5 million cycles without service and 10 million with service, our entrance solutions are designed for lasting performance in high-traffic environments. Ensuring uninterrupted performance and low total cost of ownership.

COMPLIANCE

The goal of an organisation is to safeguard the valuable assets inside – both people and property. As is often the case, industries must comply with relevant local and global laws, policies, and regulations to achieve the important goal of overall safety and security. Failure to meet the appropriate measures and criteria set out in these regulations could result in catastrophic incidents and substantial fines.

Boon Edam security entrances are trusted solutions that allow organisations to meet compliance regulations related to restricting access to areas within a building. We take compliance and safety very seriously and ensure that our products are manufactured, installed, and maintained to keep up with the strict criteria required in all our countries. We are continually improving and committed to ensuring our products are compliant and certified. More information can be found on our website.

The Signature Speedlane Edge complies with the following European standards:

- BS EN 17352 (2022)
- Machine Directive (2006/42/EC)
- EMC Directive (2004/108/EC)
- RoHS Directive (2011/65/EU)

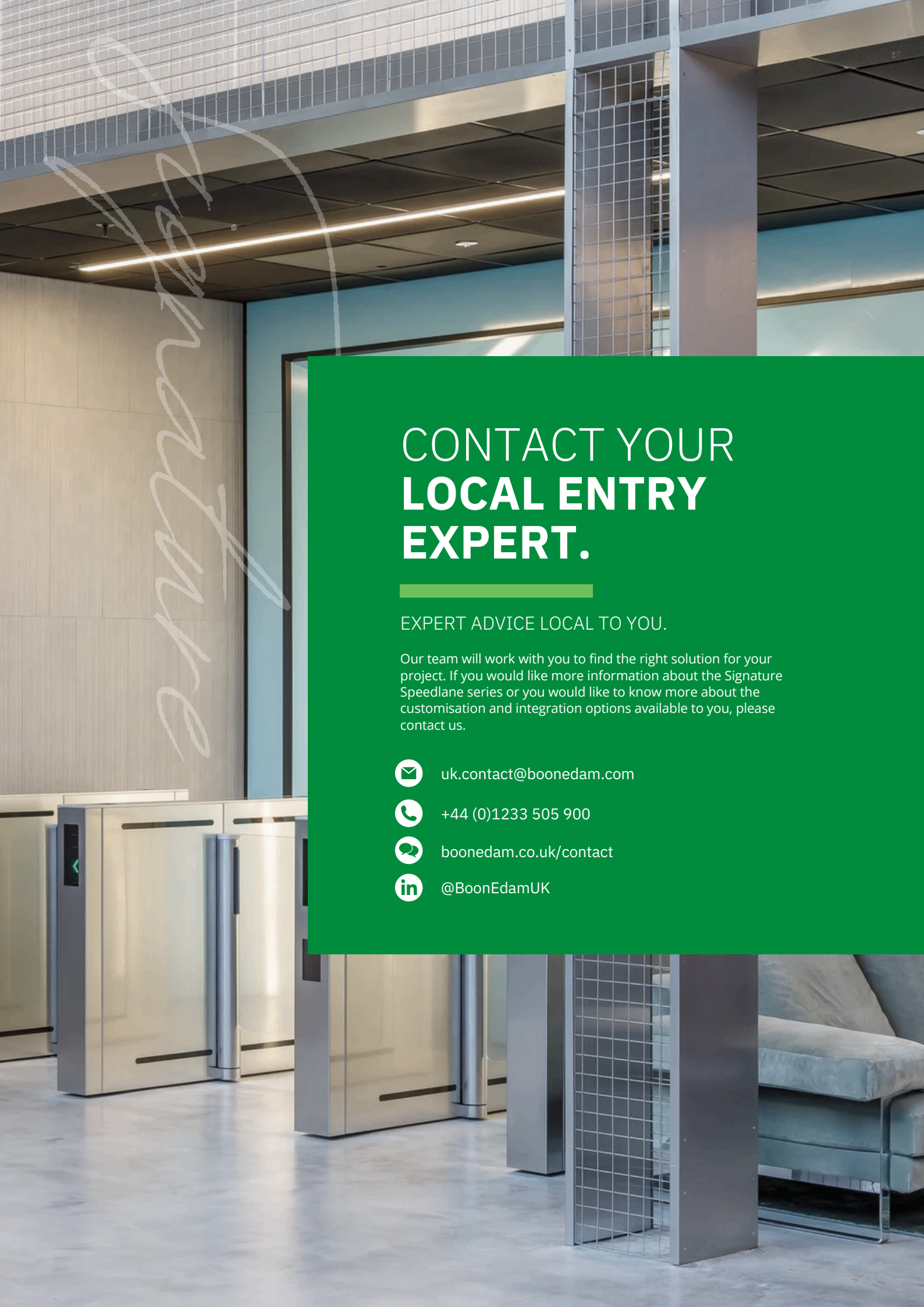

CONTACT YOUR **LOCAL ENTRY EXPERT.**

EXPERT ADVICE LOCAL TO YOU.

Our team will work with you to find the right solution for your project. If you would like more information about the Signature Speedlane series or you would like to know more about the customisation and integration options available to you, please contact us.

uk.contact@boonedam.com

+44 (0)1233 505 900

boonedam.co.uk/contact

@BoonEdamUK

OUR REACH **IS GLOBAL.**

We have been in business for 150 years, manufacturing premium aesthetic and security entrance solutions in The Netherlands, the United States of America and China. We can confidently say that we cover every corner of the globe with subsidiary companies in major cities across the globe. Furthermore our global export division not only partner with our distributors, but also offer direct sales and service to every territory. This wide net allows us to have a strong global footprint and a personal grasp of local markets and their unique entry requirements.

Boon Edam Limited
T +44 (0) 1233 505 900
E uk.contact@boonedam.com
W www.boonedam.co.uk

V2-2506

BOON EDAM
YOUR **ENTRY** EXPERTS.